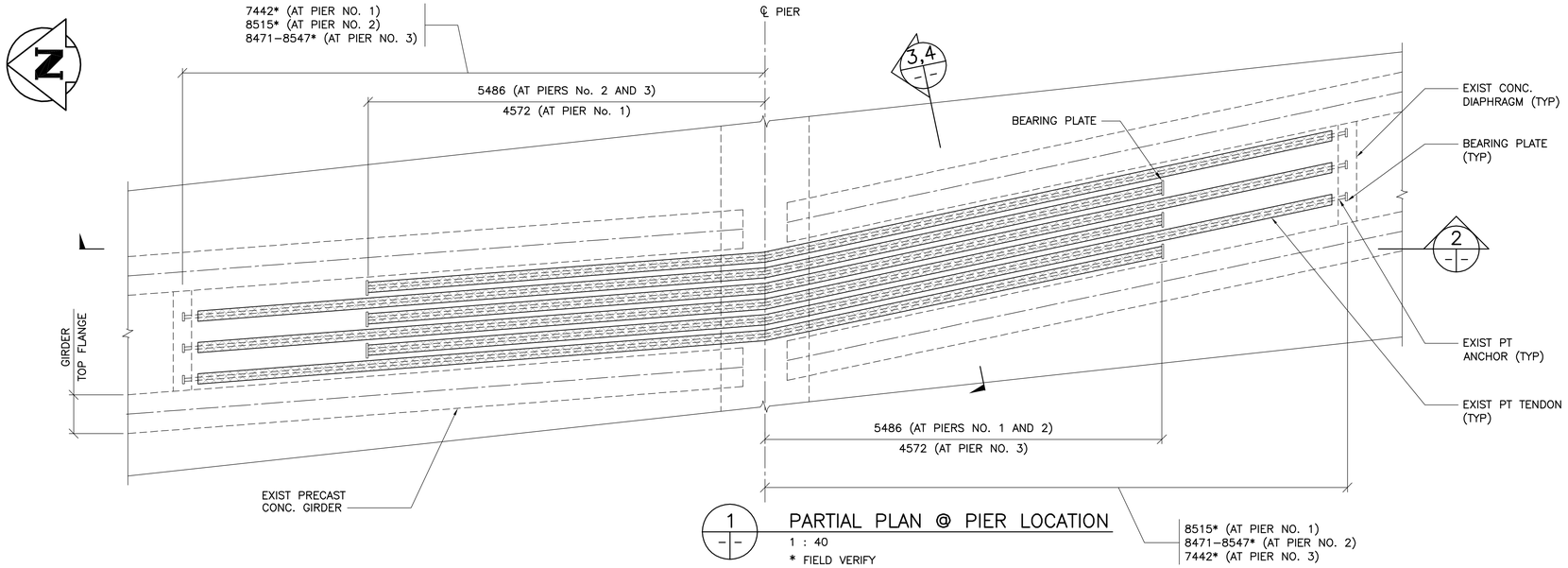

1 PARTIAL PLAN @ PIER LOCATION
1 : 40
* FIELD VERIFY

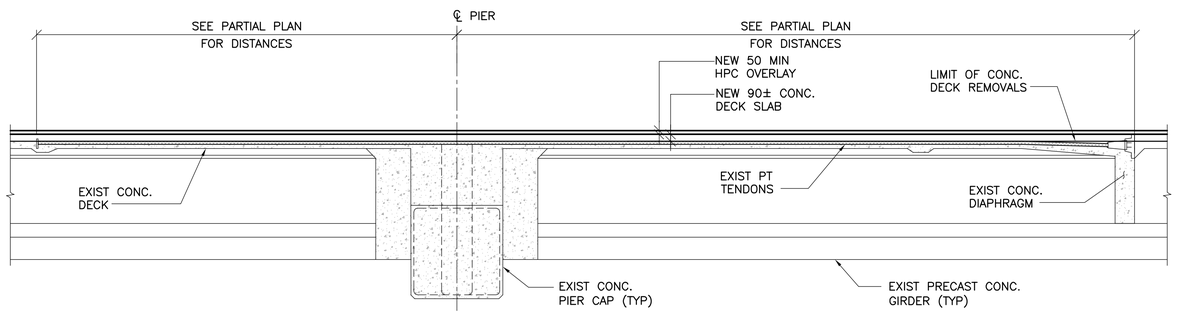

2 SECTION – EXIST POST TENSIONING TENDON
1 : 40

POST TENSIONING REPAIR NOTES:

REMEDIAL REPAIRS TO POST TENSIONING PT TENDONS.

1. THE CONTRACT ADMINISTRATOR SHALL IDENTIFY ALL LOCATIONS WHERE PT REPAIR IS TO TAKE PLACE.
2. THERE ARE 228 EXISTING PT TENDONS THAT ARE TO REMAIN FOLLOWING STRUCTURAL REMOVAL OPERATIONS. (37 OVER EACH PIER)
3. IT IS IMPORTANT THAT FOR THE ENTIRE TIME THE DUCTS ARE EXPOSED, THEY BE KEPT DRY, NO WATER SHOULD ENTER THE DUCTS.
4. THE CONTRACTOR SHALL TAKE ALL NECESSARY PRECAUTIONS DURING POST TENSIONING TENDON REPAIRS. POST TENSIONING TENDONS ARE UNDER TENSION. THE CONTRACTOR SHALL CONSIDER THE POTENTIAL FOR DEBONDING OF THE TENDONS DURING STRUCTURAL REMOVAL OPERATIONS. THE CONTRACTOR SHALL TAKE EXTREME CARE TO PROTECT POST TENSIONING ANCHORAGES DURING STRUCTURAL REMOVAL OPERATIONS.

INSPECTION AND REPAIR METHOD:

(WHERE INSPECTION IS INDICATED, THE INSPECTION IS BY THE CONTRACT ADMINISTRATOR.)

1. REMOVE DECK CONCRETE FROM APPROXIMATELY THE TOP 1/3 OF THE CIRCUMFERENCE AT THE LOCATIONS AND FOR THE LENGTH SPECIFIED BY THE CONTRACT ADMINISTRATOR AND CLEAN THE DUCT OF ALL RESIDUAL TAPE AND SEALANTS. THESE REMOVALS SHALL BE CLASSIFIED AS STAGE III TYPE 3 DECK CONCRETE REMOVALS.
2. SPREAD OPEN THE SPLIT AT THE TOP OF THE DUCT AND INSPECT THE INSIDE FOR THE COMPLETENESS OF THE ORIGINAL GROUT INJECTION. IT MAY BE NECESSARY TO CUT AWAY SOME OF THE DUCT TO INSPECT THE TENDON AND TO CARRY OUT THE NECESSARY SPLICING AND GROUTING.
3. IF SOME OF THE STRANDS OF THE TENDONS ARE NOT COVERED IN GROUT, LIGHTLY BLAST-GRIT THE STRANDS. INSPECT THE STRANDS FOR CORROSION. WHERE CORRODED, REMOVE THE CORROSION WITH A LIGHT GRIT BLAST. THE CONTRACT ADMINISTRATOR WILL DECIDE WHICH AND HOW MANY OF THE STRANDS MAY NEED TO HAVE NEW SECTION SPLICED INTO THEM. HOWEVER, THE MAXIMUM NUMBER OF STRANDS TO BE SPLICED AT A GIVEN TENDON LOCATION WILL NOT BE MORE THAN TWO. ENGAGE A SPECIALIST IN PT REPAIR TO CARRY OUT THE STRAND SPLICING. THE REPAIRED STRANDS ARE TO BE TENSIONED TO 60% OF THEIR ULTIMATE STRENGTH WITH A RECENTLY CALIBRATED TORQUE WRENCH. (02)
4. WHERE THE DUCTS ARE NOT COMPLETELY FILLED WITH GROUT, INSERT INJECTION TUBE AS FAR DOWN THE DUCT AS POSSIBLE FILLING FROM THE BOTTOM UP.
5. COVER ALL STRANDS AND SPLICES THAT MAY HAVE BEEN INSTALLED AND UNCOVERED IN THE DECK, WITH GROUT.
6. INSTALL ONE GALVANODE DAS ANODE ON EACH SIDE OF THE PT TENDON TO BE REPAIRED. ANODES SHALL BE 1000mm LONG CONNECTED TO THE EXISTING TRANSVERSE REINFORCING AND THE PT STRANDS. CONNECTIONS SHALL BE COMPLETED TO ENSURE SYSTEM REDUNDANCY.
7. USING A PREMIXED BAGGED GROUT, FILL THE RECESS WITHIN THE LIMIT OF REPAIR TO THE TOP OF THE DUCT OR NEW COUPLER, AND TO KEEP WATER FROM PONDING IN THE RECESS.
8. NEW REINFORCING FOR THE CONCRETE DECK SLAB SHALL BE INSTALLED TO ENSURE A MINIMUM CLEAR COVER OF 20mm TO THE TOP OF EXISTING CONCRETE AND/OR RECESS GROUT.

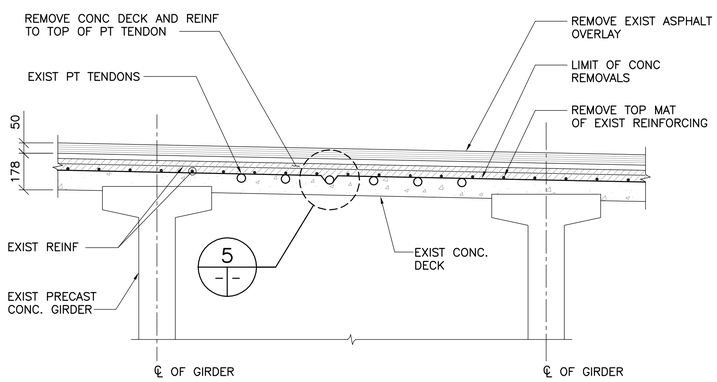

3 EXIST DECK SECTION
1 : 15

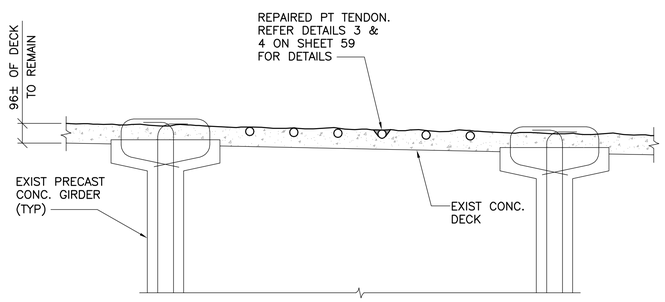

4 EXIST DECK SECTION AFTER DEMOLITION
1 : 15

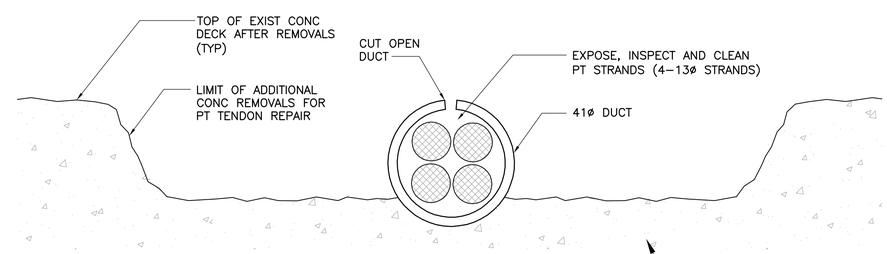

5 TYPICAL REPAIR DETAIL FOR PT DUCT
1 : 1
STAGE III TYPE 3 DECK CONCRETE REMOVALS

NOTE:
- CUT AND REMOVE DETERIORATED PT STRAND PORTION.
- RECONNECT AND TENSION STRAND WITH NEW MECHANICAL SPLICING UNIT

APEGM Certificate of Authorization
Wardrop Engineering Inc.
No. 195 Date: April 30, 2011

B.M. ELEV.		F.B.	
02	ISSUED FOR ADDENDUM 3	11.03.15	EFS
01	ISSUED FOR ADDENDUM 1	11.03.07	EFS
00	ISSUED FOR TENDER	11.02.18	EFS
NO.	REVISIONS	DATE	BY

WARDROP
A TETRA TECH COMPANY

DESIGNED BY	V.B.	CHECKED BY	E.F.S.
DRAWN BY	E.M.M.	APPROVED BY	R.H.W.
HOR. SCALE: / VERTICAL:	AS NOTED	RELEASED FOR CONSTRUCTION	DATE
DATE	10.10.20	ORIGINAL SIGNED MATT CHISLETT, P.ENG BRIDGE PROJECTS ENGINEER	11.02.16

ORIGINAL SIGNED 11.02.16
PROVINCE OF MANITOBA
E.F.G. SHEHATA
Member 23439
REGISTERED PROFESSIONAL ENGINEER

CONSULTANT DRAWING NO.
0900070502-DWG-S0058

Winnipeg
THE CITY OF WINNIPEG
PUBLIC WORKS DEPARTMENT
ENGINEERING DIVISION

OSBORNE STREET BRIDGE
REHABILITATION & RELATED WORKS

CITY DRAWING NUMBER B109-11-063
SHEET 58 OF 131

POST TENSIONING TENDONS – INSPECTION AND REPAIRS

58